# Code Compliance Research Report
# CCRR-1074

**Issue Date: 10-25-2016**
**Revision Date: 02-23-2026**
**Renewal Date: 02-28-2027**

**DIVISION: 07 00 00 – THERMAL AND MOISTURE PROTECTION**
**Section: 07 42 13.19 – Insulated Metal Wall Panels**

**REPORT HOLDER:**
**Kingspan Insulated Panels, Inc.**
**726 Summerhill Drive**
**Deland, FL USA 32724**
**www.kingspanpanels.com**

**REPORT SUBJECT:**
**KS, OPTIMO, and Karrier Foam Core Insulated Metal Panels**

## 1.0 SCOPE OF EVALUATION

This Research Report addresses compliance with the following Codes:

- 2024, 2021, and 2018 *International Building Code* (IBC)
- 2023 *Florida Building Code* excluding High-Velocity-Hurricane Zones (HVHZ) (See Section 9.1)
- 2025 and 2022 *California Building Code (CBC)* (See Section 9.2)
- 2023 *City of Los Angeles Building Code (LABC)* (See Section 9.3)

The KS, OPTIMO, and Karrier Series Foam Core Panels have been evaluated for the following properties:

- Structural
- Fire Resistance
- Water Penetration

Note: This report references the most recent Code editions noted. Section numbers in earlier editions may differ.

## 2.0 USES

KS, OPTIMO, and Karrier Foam Core Insulated Metal Panels are intended for use as exterior non-load bearing walls or as cladding on exterior walls. The panels are used in locations where combustible, non-fire-resistance-rated building construction is permitted by the IBC and on buildings of Type I, II, III, or IV construction as further described in Section 5.5.

KS, OPTIMO, and Karrier Foam Core Insulated Metal Panels comply with the Codes listed in Section 1.1, for the properties stated in section 1.0.

### 2.1 2024 IBC and IRC Evaluation Reports

The Intertek CCRR is an *Evaluation Report* for approval of an alternate material, design, or method of construction in accordance with Section 104.2.3.6.1 of the 2024 IBC and Section R104.2.2.6.1 of the 2024 IRC.

## 3.0 DESCRIPTION

### 3.1 General:

KS, OPTIMO, and Karrier Foam Core Insulated Metal Panels are sandwich panels with metal facings and foam plastic insulation cores. KS, OPTIMO, and Karrier panels are 24, 30, 36, 40, or 42 inches wide and are available in thicknesses of 2, 2.5, 3, 4, 5, or 6 inches with the exterior and interior skin thickness of minimum 26 gauge. Panels are formed with straight ends and double tongue and groove interlocking edges along the length of the panels. See Figures 1 and 2.

### 3.2 Panel Core:

The KS, OPTIMO, and Karrier panel consist of a continuously poured-in-place polyisocyanurate core or Kingspan's proprietary Quadcore.

### 3.3 Panel Facings:

**3.3.1** Steel panel facings for the KS, OPTIMO, and Karrier panels conform to ASTM A653 SS G90 galvanize coating with minimum Grade 33 ksi steel, or ASTM A792 SS AZ50 (or greater) coating with minimum Grade 33 ksi steel or ASTM A1046 SS ZM90 coating with minimum Grade 33 ksi steel.

**3.3.2** The panel facings can be finished with a variety of colored coatings.

**3.3.3** Panel facings are available in flat, micro-rib, mini-micro-rib, mini-wave, shadow line, Azteco, and KS Vektra profiles.

## 4.0 PERFORMANCE CHARACTERISTICS

### 4.1 Allowable Load Capacity:

Allowable positive and negative transverse wind loads based on panel stiffness, strength, and fastener capacity are set forth in Tables 2 through 13.

**4.2** The panels, when installed in accordance with this report, provide a weather-resistive exterior wall envelope when tested per ASTM E331 in accordance with the requirements of IBC Section 1402.2 [FBC Section 1403.2.]

**4.3** The foam plastic core has a flame spread index and a smoke developed index not exceeding 25 and 450, respectively, when tested in accordance with ASTM E84.

**4.4** All panel finishes have a thickness less than 0.036 in. (0.9 mm) and are therefore exempt from testing, in accordance with IBC Section 803.2.

**4.5** Wall assemblies constructed in accordance with Intertek Design Numbers KIP/IMWP 30-03, KIP/IMWP 30-04, and KIP/IMWP 30-05 (see Section 5.5) with steel-faced KS, OPTIMO, and Karrier panels respectively, comply with IBC Section 2603.5 for walls of any height in Type I, II, III, or IV construction permitted to be of non-fire-resistance-rated construction.

## 5.0 INSTALLATION

### 5.1 General Installation:

Panels may be installed in either a vertical or horizontal orientation. The panels are fastened to steel framing support members with clips and fasteners as described in Section 5.2. Structural support members shall provide a minimum panel bearing width of 1-5/8 inches.

### 5.2 Fasteners:

Panels are attached to the steel supports with either the 12 gage stainless steel panel clips (See Figure 3) or the 14 gauge Leo-Klip (See Figure 4). Install two #14 or 1/4-in. diameter hex-head screws. For Leo-Klip the fasteners shall be in the two center holes. The screws shall be of sufficient length to properly engage the wall support member.

### 5.3 Sealant:

KS, OPTIMO, and Karrier dual tongue and groove panel joints are sealed with a 1/4-inch bead of non-skinning butyl

sealant. The sealant is applied at the side joints between adjacent panels before panel engagement. The panels are interlocked to make continuous seal contact. Installation proceeds along the wall elevation with successive panels being in accordance with the manufacturer's installation instructions.

### 5.4 Flashing:

Flashing must be installed in accordance with Section 1404.4 of the IBC including, but not limited to, panel ends, eaves, openings, and corners.

### 5.5 Use on Exterior Walls of Type I, II, III, or IV Construction:

The panels may be used on non-fire-resistance-rated exterior walls of buildings of Type I, II, III, or IV construction of any height, when the construction conforms with Intertek Design Number KIP/IMWP 30-03 (KS) or KIP/IMWP 30-04 (OPTIMO) or KIP/IMWP 30-05 (Karrier).

## 6.0 CONDITIONS OF USE

KS, OPTIMO, and Karrier Foam Core Insulated Metal Panels described in this Research Report comply with the Codes listed in Section 1.0 of this report, subject to the following conditions:

**6.1** Installation must comply with this Research Report, the manufacturer's published installation instructions, and the applicable Code. In the event of a conflict between the manufacturer's instructions and this report, this report governs.

**6.2** Wall panel installation shall be limited to non-load bearing walls.

**6.3** The panels may be installed without a thermal barrier complying with IBC Section 2603.4.

**6.4** The panels may be installed on buildings of Types I, II, III, and IV construction, permitted to be of non-fire-resistance-rated construction, as follows:

**6.4.1** Buildings of Any Height: Wall assemblies described in Intertek Design Numbers KIP/IMWP 30-03, KIP/IMWP 30-04 and KIP/IMWP 30-05. See design listings at the Intertek Directory of Building Products for listed assembly details.

**6.5** Details on wall framing must be approved by the Building Code official prior to installation.

**6.6** Wind design loads determined from nominal design wind speeds ($V_{asd}$) in accordance with Section 1609.3.1 of

the IBC shall not exceed the maximum allowable design pressure given in Tables 2 through 12.

**6.7** All construction plans and calculations for load conditions must be submitted to the Code official for approval.

**6.8** KS, OPTIMO, and Karrier Foam Core Insulated Metal Panels are manufactured under a quality control program with inspections by Intertek Testing Services NA, Inc. at the following locations:

Kingspan Manufacturing Plants

| Location | Products |
|---|---|
| Caledon, ON | All |
| Langley, BC | All |
| Modesto, CA | All |
| Deland, FL | All |

## 7.0 SUPPORTING EVIDENCE

**7.1** Intertek evaluation and testing reports in accordance with ICC-ES Acceptance Criteria for Sandwich Panels AC04, dated June 2019 (editorially revised Dec. 2020), Acceptance Criteria for Sandwich Panel Adhesives AC05, dated June 2009 (editorially revised May 2018), and Acceptance Criteria for Foam Plastic Insulation AC12, dated June 2015 (editorially revised May 2016).

**7.2** Test reports demonstrating compliance with ASTM E84-2021a and NFPA 285-23.

**7.3** Test reports for water penetration resistance demonstrating compliance with ASTM E331-2000(2016).

## 8.0 IDENTIFICATION

KS, OPTIMO, and Karrier Foam Core Insulated Metal Panels are identified by a marking bearing the Report holder's name, the product name, the flame spread and smoke developed indices, the Intertek Mark, and the Code Compliance Research Report number (CCRR-1074).

## 9.0 OTHER CODES

### 9.1 FLORIDA BUILDING CODE

#### 9.1.1 Scope of Evaluation:

The KS, OPTIMO, and Karrier Foam Core Insulated Metal Panels were evaluated for compliance with the 2023 *Florida Building Code – Building.*

#### 9.1.2 Conclusion:

The KS, OPTIMO, and Karrier Foam Core Insulated Metal Panels, described in Sections 2.0 through 7.0 of this Research Report, comply with the 2023 *Florida Building Code – Building*, subject to the following conditions:

- Use of the KS, OPTIMO, and Karrier Foam Core Insulated Metal Panels for compliance with the High-Velocity Hurricane Zone provisions of the 2023 *Florida Building Code – Building* and the *Florida Building Code – Residential* has not been evaluated, and is outside the scope of this Research Report.
- Intertek is an approved evaluation entity and quality assurance entity pursuant to Florida Statute 553.842 – *Product Evaluation and Approval*.

### 9.2 CALIFORNIA BUILDING CODE

#### 9.2.1 Scope of Evaluation:

The KS, OPTIMO, and Karrier Foam Core Insulated Metal Panels were evaluated for compliance with the 2025 and 2022 *California Building Code.*

#### 9.2.2 Conclusion:

The KS, OPTIMO, and Karrier Foam Core Insulated Metal Panels, described in Sections 2.0 through 7.0 of this Research Report, comply with the 2025 and 2022 *California Building Code.*

### 9.3 CITY OF LOS ANGELES BUILDING CODE

#### 9.3.1 Scope of Evaluation:

The KS, OPTIMO, and Karrier Foam Core Insulated Metal Panels were evaluated for compliance with the 2023 *City of Los Angeles Building Code.*

#### 9.3.2 Conclusion:

The KS, OPTIMO, and Karrier Foam Core Insulated Metal Panels, described in Sections 2.0 through 7.0 of this Research Report, comply with the 2023 *City of Los Angeles Building Code.*

## 10.0 CODE COMPLIANCE RESEARCH REPORT USE

**10.1** Approval of building products and/or materials can only be granted by a building official having legal authority in the specific jurisdiction where approval is sought.

**10.2** Code Compliance Research Reports shall not be used in any manner that implies an endorsement of the product by Intertek.
Reference to the Intertek website address: https://bpdirectory.intertek.com is recommended to ascertain the current version and status of this report.

This Code Compliance Research Report ("Report") is for the exclusive use of Intertek's Client and is provided pursuant to the agreement between Intertek and its Client. Intertek's responsibility and liability are limited to the terms and conditions of the agreement. Intertek assumes no liability to any party, other than to the Client in accordance with the agreement, for any loss, expense or damage occasioned by the use of this Report. Only the Client is authorized to permit copying or distribution of this Report and then only in its entirety, and the Client shall not use the Report in a misleading manner. Client further agrees and understands that reliance upon the Report is limited to the representations made therein. The Report is not an endorsement or recommendation for use of the subject and/or product described herein. This Report is not the Intertek Listing Report covering the subject product and utilized for Intertek Certification and this Report does not represent authorization for the use of any Intertek certification marks. Any use of the Intertek name or one of its marks for the sale or advertisement of the tested material, product or service must first be approved in writing by Intertek.

**TABLE 1 – PROPERTIES EVALUATED**

| PROPERTY | 2024 IBC SECTION | 2021 and 2018 IBC SECTION | 2023 FBC SECTION | 2025 and 2022 CBC SECTION | 2023 LABC SECTION |
|---|---|---|---|---|---|
| Interior Wall and Ceiling Classifications for Fire Performance and Smoke Development | 803.1 | 803.1 | 803.1 | 803.1 | 803.1 |
| Fire Protection NFPA 13 Sprinkler Systems | 903.3.1.1 | 903.3.1.1 | 903.3.1.1 | 903.3.1.1 | 903.3.1.1 |
| Exterior Wall Weather Protection | 1402.2 | 1402.2 | 1403.2 | 1402.2 | 1402.2 |
| Flashing | 1404.4 | 1405.4 | 1405.4 | 1405.4 | 1405.4 |
| Wind Loads Wind Speed Conversion | 1609.3.1 | 1609.3.1 | 1609.3.1 | 1609.3.1 | 1609.3.1 |
| Plastics Thermal Barrier | 2603.4 | 2603.4 | 2603.4 | 2603.4 | 2603.4 |
| Exterior Walls of Buildings of Type I, II, III or IV construction | 2603.5 | 2603.5 | 2603.5 | 2603.5 | 2603.5 |
| Insulated Metal Panels (IMP) | 1409 | - | - | 1409 (2025) | - |

**TABLE 2 – PRODUCTS EVALUATED**

| Panel Designation | Profile | |
|---|---|---|
| | Exterior | Interior |
| KS, OPTIMO, and Karrier Foam Core Insulated Metal Panels | Smooth (Flat)<br>Embossed (Flat)<br>Shadowline (Corrugated Profile)<br>Micro-Rib (Corrugated Profile)<br>Mini-Micro Rib (corrugated Profile)<br>Mini-Wave (Corrugated Profile)<br>Azteco (Flat)<br>KS Vektra (Corrugated Profile) | Shadowline<br>Smooth (Flat) |
| KS, OPTIMO, and Karrier Foam Core Insulated Metal Panels | Flat or with non-directional embossed or smooth surface texture | Shadowline<br>Smooth (Flat) |

**TABLE 3 – TABLE 14: MAXIMUM ALLOWABLE WIND LOADS (PSF)**

1. Allowable loads are applicable to wind design pressure derived from nominal wind speed ($V_{asd}$) per IBC Section 1609.3.1.
2. Allowable loads are based on the lesser of deflection, and panel strength, with consideration of the effects of fastener location and fastener-to-panel connection on the allowable negative loads. Limiting factor for each allowable load is identified by the following notations:
   (N) Negative Load/Connection Design Strength (2.0 SF applied to max. test load)
   (S) Core Shear Design Strength (3.0 SF applied to shear strength per ASTM C273)
   (B) Flexural Bending Design Strength (Allowable compressive stress per ADM and AISI S100 for aluminum and steel facing respectively)
   (D) Deflection at L/180 (Core Shear Modulus, G = 588 psi)
3. Design strength for panel connection addresses panel clip-to-panel connection only. Allowable load may be lower based upon the design value of fasteners in supporting structural framing and shall be checked by a qualified engineer.
4. Allowable loads for double span and triple span apply to continuous panels installed over three supports and four supports respectively. Supports are equally spaced.

**TABLE 3 – KS, OPTIMO, and Karrier Allowable Positive and Negative Transverse Loads for Single Span (L/180)(PSF)**

| Panel Thickness (Inches) | 24" Wide Panel - 22 Gage Exterior/24 Gage Interior Steel Skin | | | | | | | | | | | | | |
|---|---|---|---|---|---|---|---|---|---|---|---|---|---|---|
| | Span (Feet) | | | | | | | | | | | | | |
| | 2 | | 4 | | 6 | | 8 | | 10 | | 12 | | 14 | |
| **2** | 94 | S | 47 | S | 31 | S | 24 | S | 19 | S | 16 | S | 13 | D |
| **2.5** | 118 | S | 59 | S | 39 | S | 30 | S | 24 | S | 20 | S | 17 | S |
| **3** | 142 | S | 71 | S | 47 | S | 36 | S | 28 | S | 24 | S | 20 | S |
| **4** | 190 | S | 95 | S | 63 | S | 48 | S | 38 | S | 32 | S | 27 | S |

Limiting Factor: (N) Negative Load/Connection, (S) Core Shear, (B) Flexural Bending, (D) Deflection

**TABLE 4 – KS, OPTIMO, and Karrier Allowable Positive and Negative Transverse Loads for Double Span (L/180)(PSF)**

| Panel Thickness (Inches) | 24" Wide Panel - 22 Gage Exterior/24 Gage Interior Steel Skin | | | | | | | | | | | | | |
|---|---|---|---|---|---|---|---|---|---|---|---|---|---|---|
| | Span Between Supports (Feet) | | | | | | | | | | | | | |
| | 2 | | 4 | | 6 | | 8 | | 10 | | 12 | | 14 | |
| **2** | 92 | S | 43 | S | 28 | S | 20 | S | 16 | S | 13 | S | 11 | S |
| **2.5** | 115 | S | 55 | S | 35 | S | 25 | S | 20 | S | 16 | S | 14 | S |
| **3** | 139 | S | 67 | S | 42 | S | 31 | S | 24 | S | 20 | S | 17 | S |
| **4** | 187 | S | 90 | S | 58 | S | 42 | S | 33 | S | 27 | S | 23 | S |

Limiting Factor: (N) Negative Load/Connection, (S) Core Shear, (B) Flexural Bending, (D) Deflection

**TABLE 5 – KS, OPTIMO, and Karrier Allowable Positive and Negative Transverse Loads for Triple Span (L/180)(PSF)**

| Panel Thickness (Inches) | 24" Wide Panel - 22 Gage Exterior/24 Gage Interior Steel Skin | | | | | | | | | | | | | |
|---|---|---|---|---|---|---|---|---|---|---|---|---|---|---|
| | Span Between Supports (Feet) | | | | | | | | | | | | | |
| | 2 | | 4 | | 6 | | 8 | | 10 | | 12 | | 14 | |
| **2** | 90 | S | 42 | S | 27 | S | 20 | S | 16 | S | 13 | S | 11 | S |
| **2.5** | 113 | S | 53 | S | 34 | S | 25 | S | 20 | S | 17 | S | 14 | S |
| **3** | 137 | S | 65 | S | 42 | S | 31 | S | 24 | S | 20 | S | 17 | S |
| **4** | 185 | S | 88 | S | 56 | S | 41 | S | 33 | S | 27 | S | 23 | S |

Limiting Factor: (N) Negative Load/Connection, (S) Core Shear, (B) Flexural Bending, (D) Deflection

**TABLE 6 – KS, OPTIMO, and Karrier Allowable Positive and Negative Transverse Loads for Single Span (L/180)(PSF)**

| Panel Thickness (Inches) | 30" Wide Panel - 22 Gage Exterior/24 Gage Interior Steel Skin | | | | | | | | | | | | | |
|---|---|---|---|---|---|---|---|---|---|---|---|---|---|---|
| | Span (Feet) | | | | | | | | | | | | | |
| | 2 | | 4 | | 6 | | 8 | | 10 | | 12 | | 14 | |
| **2** | 92 | S | 43 | S | 28 | S | 20 | S | 16 | S | 13 | S | 11 | S |
| **2.5** | 115 | S | 55 | S | 35 | S | 25 | S | 20 | S | 16 | S | 14 | S |
| **3** | 139 | S | 67 | S | 42 | S | 31 | S | 24 | S | 20 | S | 17 | S |
| **4** | 187 | S | 90 | S | 58 | S | 42 | S | 33 | S | 27 | S | 23 | S |

Limiting Factor: (N) Negative Load/Connection, (S) Core Shear, (B) Flexural Bending, (D) Deflection

**TABLE 7 – KS, OPTIMO, and Karrier Allowable Positive and Negative Transverse Loads for Double Span (L/180)(PSF)**

| Panel Thickness (Inches) | 30" Wide Panel - 22 Gage Exterior/24 Gage Interior Steel Skin | | | | | | | | | | | | | |
|---|---|---|---|---|---|---|---|---|---|---|---|---|---|---|
| | Span Between Supports (Feet) | | | | | | | | | | | | | |
| | 2 | | 4 | | 6 | | 8 | | 10 | | 12 | | 14 | |
| **2** | 92 | S | 43 | S | 28 | S | 20 | S | 16 | S | 13 | S | 11 | S |
| **2.5** | 115 | S | 55 | S | 35 | S | 25 | S | 20 | S | 16 | S | 14 | S |
| **3** | 139 | S | 67 | S | 42 | S | 31 | S | 24 | S | 20 | S | 17 | S |
| **4** | 187 | S | 90 | S | 58 | S | 42 | S | 33 | S | 27 | S | 23 | S |

Limiting Factor: (N) Negative Load/Connection, (S) Core Shear, (B) Flexural Bending, (D) Deflection

**TABLE 8– KS, OPTIMO, and Karrier Allowable Positive and Negative Transverse Loads for Triple Span (L/180)(PSF)**

| Panel Thickness (Inches) | 30" Wide Panel - 22 Gage Exterior/24 Gage Interior Steel Skin | | | | | | | | | | | | | |
|---|---|---|---|---|---|---|---|---|---|---|---|---|---|---|
| | Span Between Supports (Feet) | | | | | | | | | | | | | |
| | 2 | | 4 | | 6 | | 8 | | 10 | | 12 | | 14 | |
| **2** | 90 | S | 42 | S | 27 | S | 20 | S | 16 | S | 13 | S | 11 | S |
| **2.5** | 113 | S | 53 | S | 34 | S | 25 | S | 20 | S | 17 | S | 14 | S |
| **3** | 137 | S | 65 | S | 42 | S | 31 | S | 24 | S | 20 | S | 17 | S |
| **4** | 185 | S | 88 | S | 56 | S | 41 | S | 33 | S | 27 | S | 23 | S |

Limiting Factor: (N) Negative Load/Connection, (S) Core Shear, (B) Flexural Bending, (D) Deflection

**TABLE 9 – KS, OPTIMO, and Karrier Allowable Positive and Negative Transverse Loads for Single Span (L/180)(PSF)**

| Panel Thickness (Inches) | 36" Wide Panel - 22 Gage Exterior/24 Gage Interior Steel Skin | | | | | | | | | | | | | |
|---|---|---|---|---|---|---|---|---|---|---|---|---|---|---|
| | Span (Feet) | | | | | | | | | | | | | |
| | 2 | | 4 | | 6 | | 8 | | 10 | | 12 | | 14 | |
| **2** | 94 | S | 80 | N | 31 | S | 24 | S | 19 | S | 16 | S | 13 | D |
| **2.5** | 118 | S | 80 | N | 39 | S | 30 | S | 24 | S | 20 | S | 17 | S |
| **3** | 142 | S | 80 | N | 47 | S | 36 | S | 28 | S | 24 | S | 20 | S |
| **4** | 160 | N | 80 | N | 53 | N | 40 | N | 32 | N | 27 | N | 23 | N |

Limiting Factor: (N) Negative Load/Connection, (S) Core Shear, (B) Flexural Bending, (D) Deflection

**TABLE 10– KS, OPTIMO, and Karrier Allowable Positive and Negative Transverse Loads for Double Span (L/180)(PSF)**

| Panel Thickness (Inches) | 36" Wide Panel - 22 Gage Exterior/24 Gage Interior Steel Skin | | | | | | | | | | | | | |
|---|---|---|---|---|---|---|---|---|---|---|---|---|---|---|
| | Span Between Supports (Feet) | | | | | | | | | | | | | |
| | 2 | | 4 | | 6 | | 8 | | 10 | | 12 | | 14 | |
| **2** | 92 | S | 82 | N | 28 | S | 20 | S | 16 | S | 13 | S | 11 | S |
| **2.5** | 115 | S | 82 | N | 35 | S | 25 | S | 20 | S | 16 | S | 14 | S |
| **3** | 139 | S | 82 | N | 42 | S | 31 | S | 24 | S | 20 | S | 17 | S |
| **4** | 163 | N | 82 | N | 54 | N | 41 | N | 33 | N | 27 | S | 23 | S |

Limiting Factor: (N) Negative Load/Connection, (S) Core Shear, (B) Flexural Bending, (D) Deflection

**TABLE 11– KS, OPTIMO, and Karrier Allowable Positive and Negative Transverse Loads for Triple Span (L/180)(PSF)**

| Panel Thickness (Inches) | 36" Wide Panel - 22 Gage Exterior/24 Gage Interior Steel Skin | | | | | | | | | | | | | |
|---|---|---|---|---|---|---|---|---|---|---|---|---|---|---|
| | Span Between Supports (Feet) | | | | | | | | | | | | | |
| | 2 | | 4 | | 6 | | 8 | | 10 | | 12 | | 14 | |
| **2** | 90 | S | 90 | S | 27 | S | 20 | S | 16 | S | 13 | S | 11 | S |
| **2.5** | 113 | S | 93 | N | 34 | S | 25 | S | 20 | S | 17 | S | 14 | S |
| **3** | 137 | S | 93 | N | 42 | S | 31 | S | 24 | S | 20 | S | 17 | S |
| **4** | 185 | S | 93 | N | 56 | S | 41 | S | 33 | S | 27 | S | 23 | S |

Limiting Factor: (N) Negative Load/Connection, (S) Core Shear, (B) Flexural Bending, (D) Deflection

**TABLE 12 – KS, OPTIMO, and Karrier Allowable Positive and Negative Transverse Loads for Single Span (L/180)(PSF)**

| Panel Thickness (Inches) | 24”-42” Wide Panel - 26 Gage Exterior/26 Gage Interior Steel Skin[1] | | | | | | | | | | | | | |
|---|---|---|---|---|---|---|---|---|---|---|---|---|---|---|
| | Span (Feet) | | | | | | | | | | | | | |
| | 2 | | 4 | | 6 | | 8 | | 10 | | 12 | | 14 | |
| **2** | 51 | N | 26 | N | 17 | N | 13 | N | 10 | N | - | - | - | - |
| **2.5** | 51 | N | 26 | N | 17 | N | 13 | N | 10 | N | - | - | - | - |
| **3** | 51 | N | 26 | N | 17 | N | 13 | N | 10 | N | - | - | - | - |
| **4** | 51 | N | 26 | N | 17 | N | 13 | N | 10 | N | - | - | - | - |
| **5** | 51 | N | 26 | N | 17 | N | 13 | N | 10 | N | - | - | - | - |
| **6** | 51 | N | 26 | N | 17 | N | 13 | N | 10 | N | - | - | - | - |

Limiting Factor: (N) Negative Load/Connection, (S) Core Shear, (B) Flexural Bending, (D) Deflection

1. Available in 24”, 30”, 36”, 40” and 42” widths

**TABLE 13 – KS, OPTIMO, and Karrier Allowable Positive and Negative Transverse Loads for Double Span (L/180)(PSF)**

| Panel Thickness (Inches) | 24”-42” Wide Panel - 26 Gage Exterior/26 Gage Interior Steel Skin[1] | | | | | | | | | | | | | |
|---|---|---|---|---|---|---|---|---|---|---|---|---|---|---|
| | Span Between Supports (Feet) | | | | | | | | | | | | | |
| | 2 | | 4 | | 6 | | 8 | | 10 | | 12 | | 14 | |
| **2** | 58 | N | 29 | N | 19 | N | 14 | N | 12 | N | - | - | - | - |
| **2.5** | 58 | N | 29 | N | 19 | N | 14 | N | 12 | N | - | - | - | - |
| **3** | 58 | N | 29 | N | 19 | N | 14 | N | 12 | N | - | - | - | - |
| **4** | 58 | N | 29 | N | 19 | N | 14 | N | 12 | N | - | - | - | - |
| **5** | 58 | N | 29 | N | 19 | N | 14 | N | 12 | N | - | - | - | - |
| **6** | 58 | N | 29 | N | 19 | N | 14 | N | 12 | N | - | - | - | - |

Limiting Factor: (N) Negative Load/Connection, (S) Core Shear, (B) Flexural Bending, (D) Deflection

1. Available in 24”, 30”, 36”, 40” and 42” widths

**TABLE 14 – KS, OPTIMO, and Karrier Allowable Positive and Negative Transverse Loads for Triple Span (L/180)(PSF)**

| Panel Thickness (Inches) | 24”-42” Wide Panel - 26 Gage Exterior/26 Gage Interior Steel Skin[1] | | | | | | | | | | | | | |
|---|---|---|---|---|---|---|---|---|---|---|---|---|---|---|
| | Span Between Supports (Feet) | | | | | | | | | | | | | |
| | 2 | | 4 | | 6 | | 8 | | 10 | | 12 | | 14 | |
| **2** | 64 | N | 32 | N | 21 | N | 16 | N | 13 | N | 11 | N | - | - |
| **2.5** | 64 | N | 32 | N | 21 | N | 16 | N | 13 | N | 11 | N | - | - |
| **3** | 64 | N | 32 | N | 21 | N | 16 | N | 13 | N | 11 | N | - | - |
| **4** | 64 | N | 32 | N | 21 | N | 16 | N | 13 | N | 11 | N | - | - |
| **5** | 64 | N | 32 | N | 21 | N | 16 | N | 13 | N | 11 | N | - | - |
| **6** | 64 | N | 32 | N | 21 | N | 16 | N | 13 | N | 11 | N | - | - |

Limiting Factor: (N) Negative Load/Connection, (S) Core Shear, (B) Flexural Bending, (D) Deflection

1. Available in 24”, 30”, 36”, 40” and 42” widths

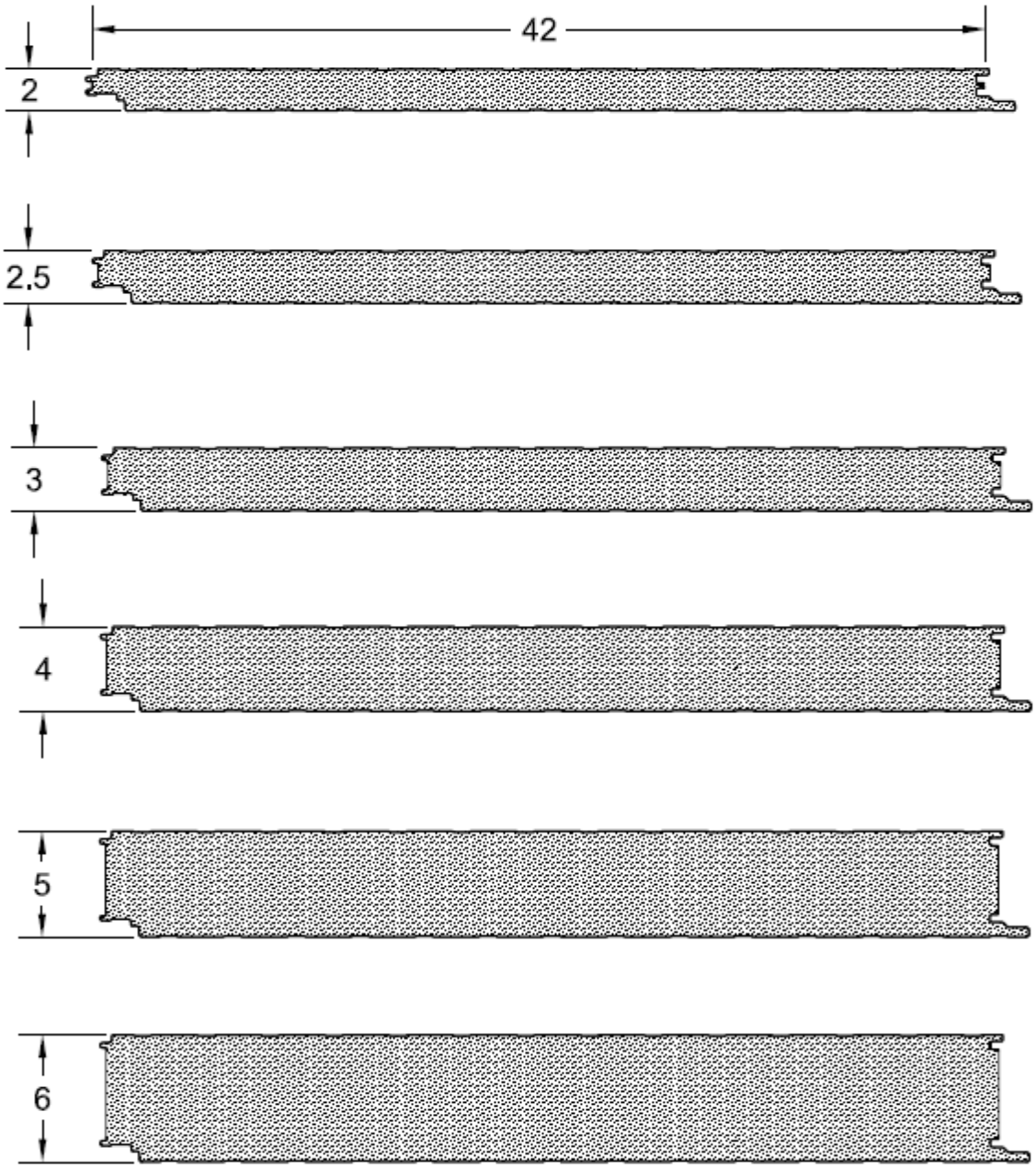


**Figure 1a – KS, OPTIMO, and Karrier 42 Inch Panel**
**2”, 2.5”, 3”, 4”, 5”, 6”**

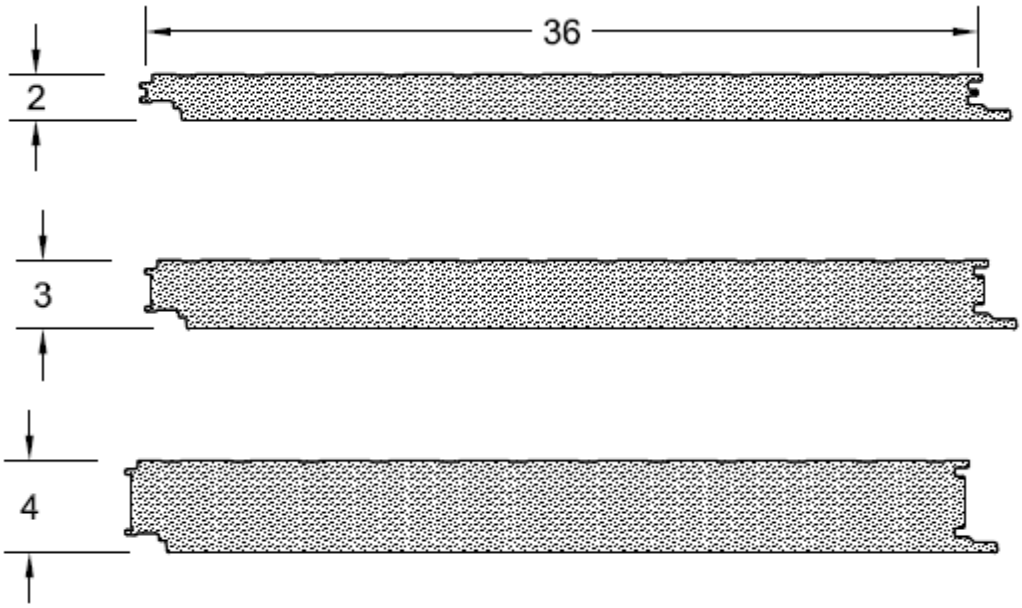


**Figure 1b – KS, OPTIMO, and Karrier 36 Inch Panel**
**2”, 3”, 4”**

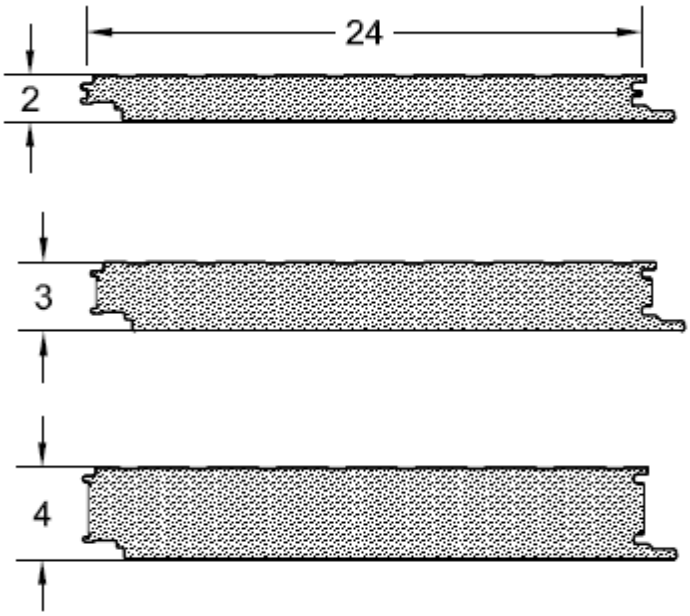


**Figure 1c – KS, OPTIMO, and Karrier 24 Inch Panel**
**2”, 3”, 4”**

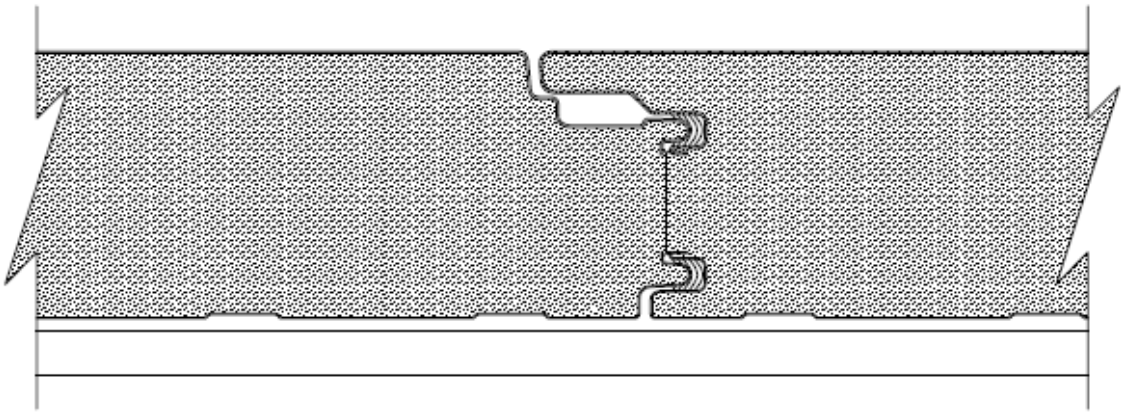

**Figure 2 – KS, OPTIMO, and Karrier Panel Joint Engagement**

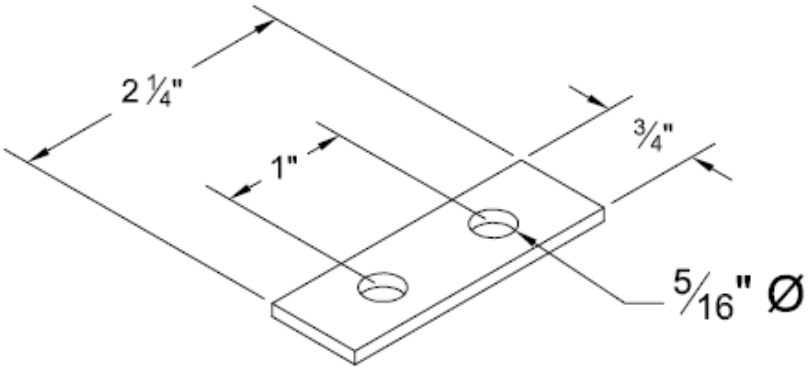


**Figure 3 – KS, OPTIMO, and Karrier Panel 12 GA Stainless Steel Two-Hole Hidden Fastener Clip**

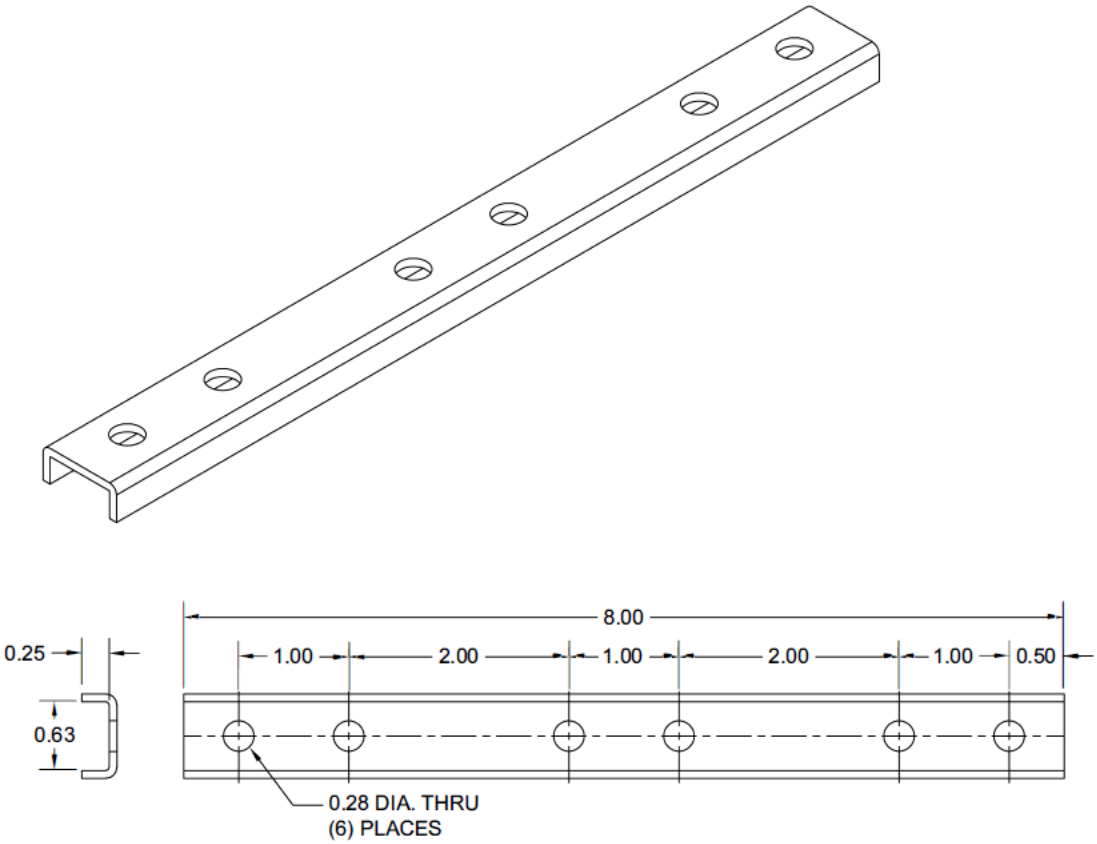


**Figure 4 – KS, OPTIMO, and Karrier Panel 14 GA Leo-Klip**

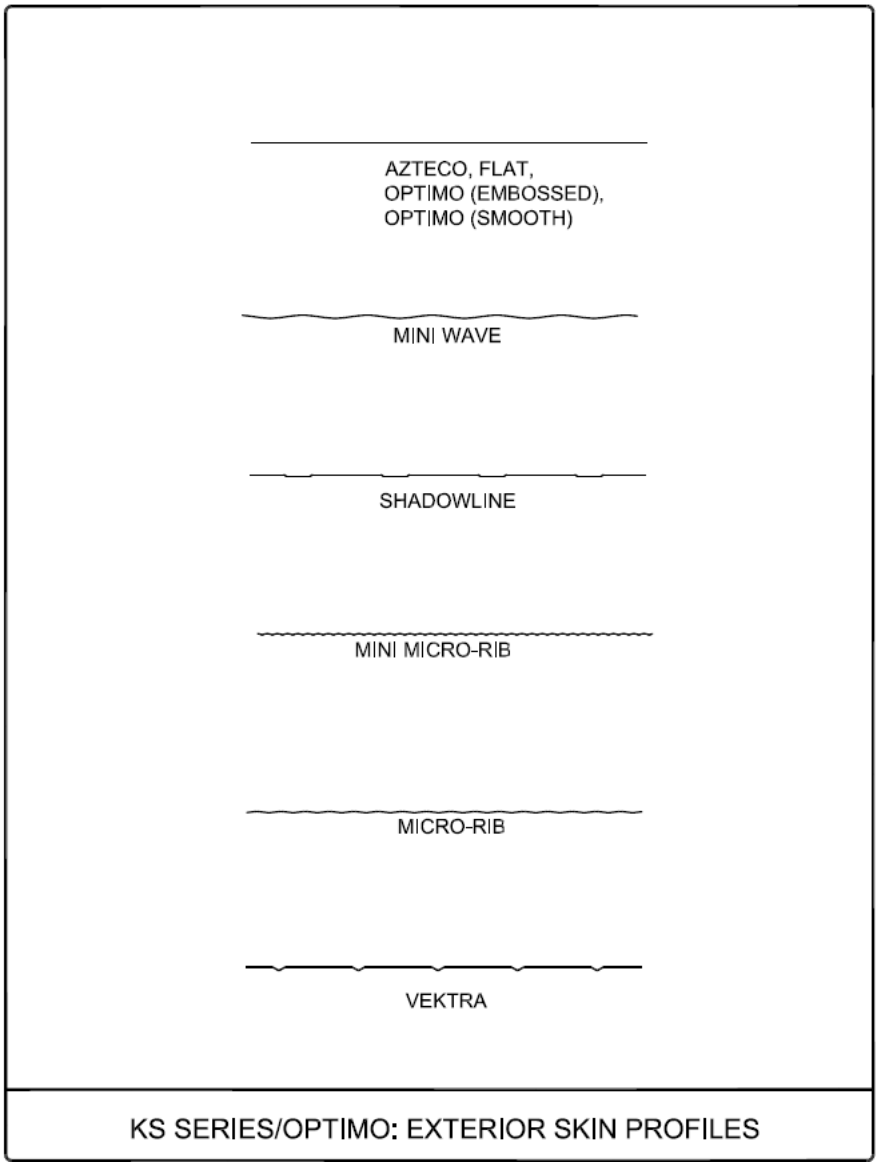


**Figure 5 – KS, OPTIMO, and Karrier Exterior Skin Profiles**